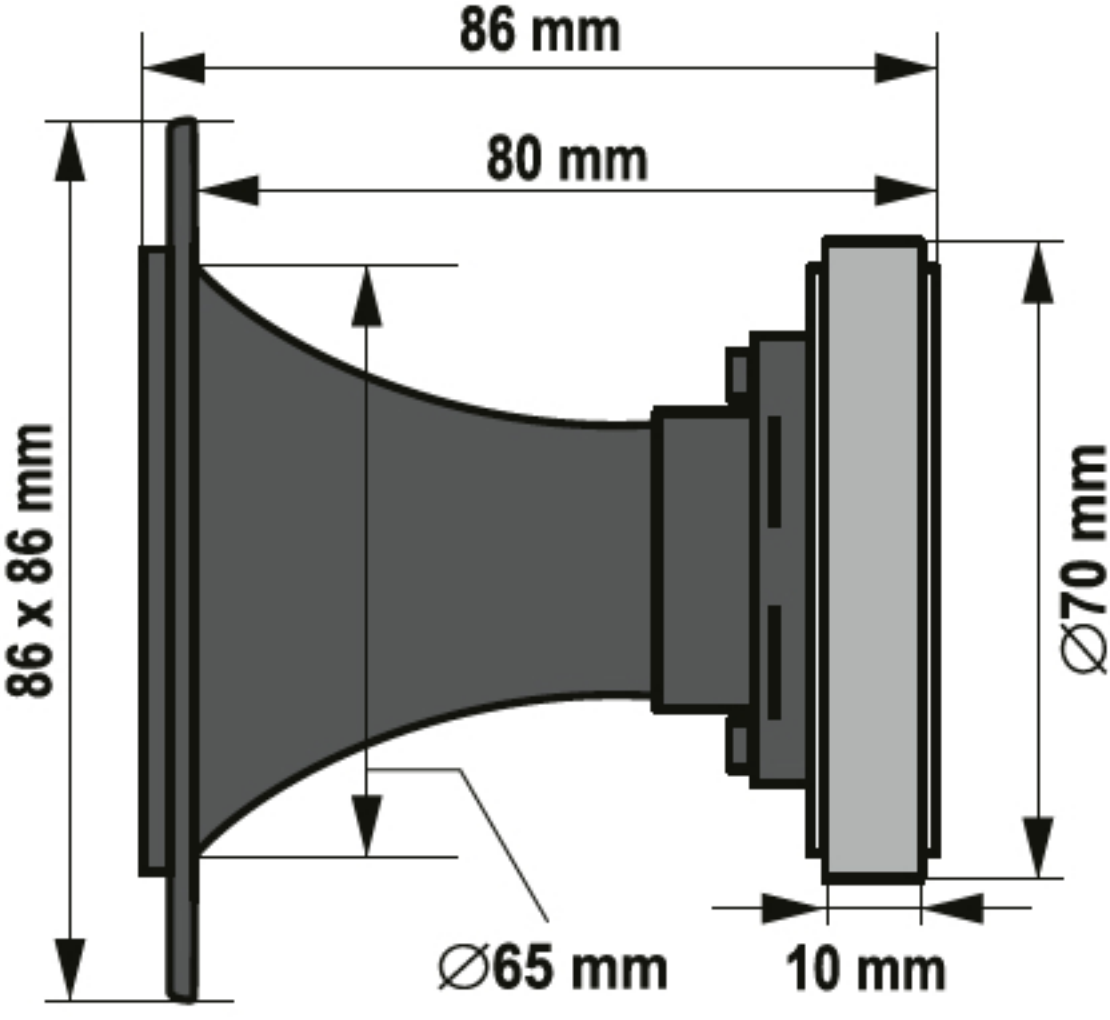
86 mm
80 mm
86 x 86 mm
∅70 mm
∅65 mm
10 mm