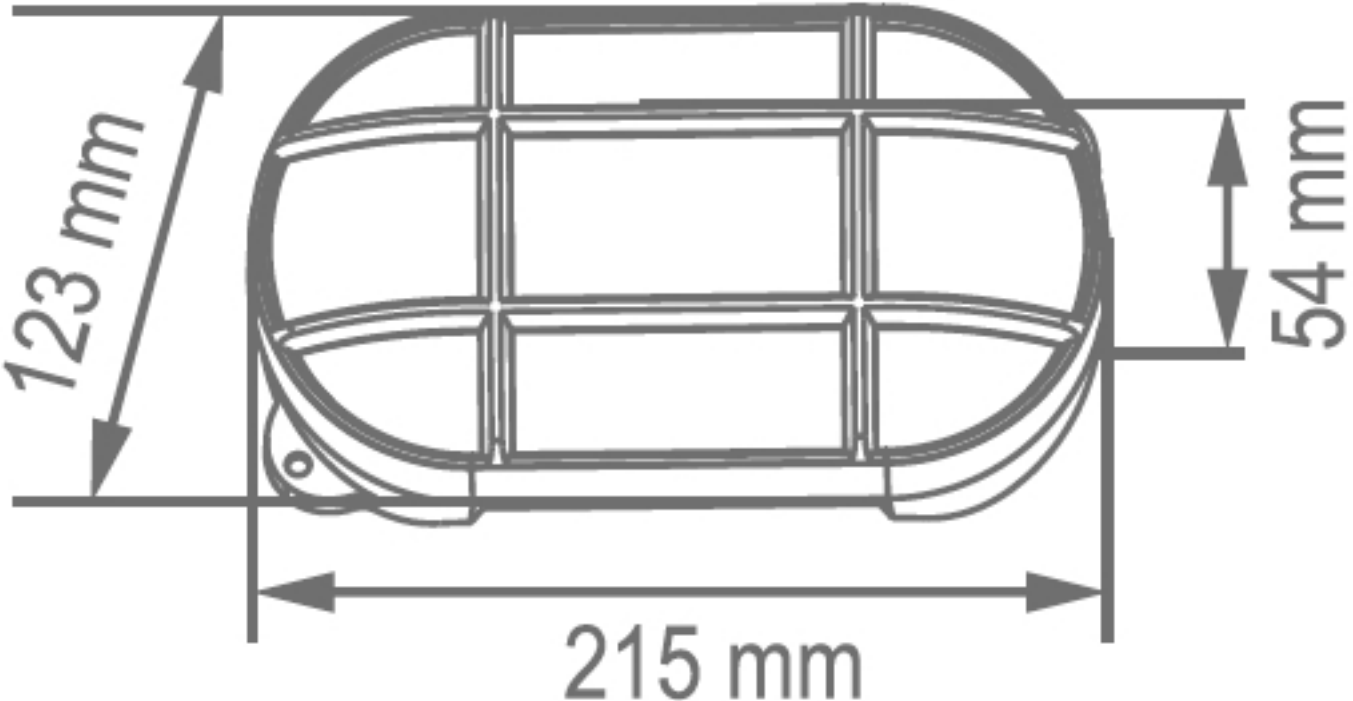
123 mm
54 mm
215 mm