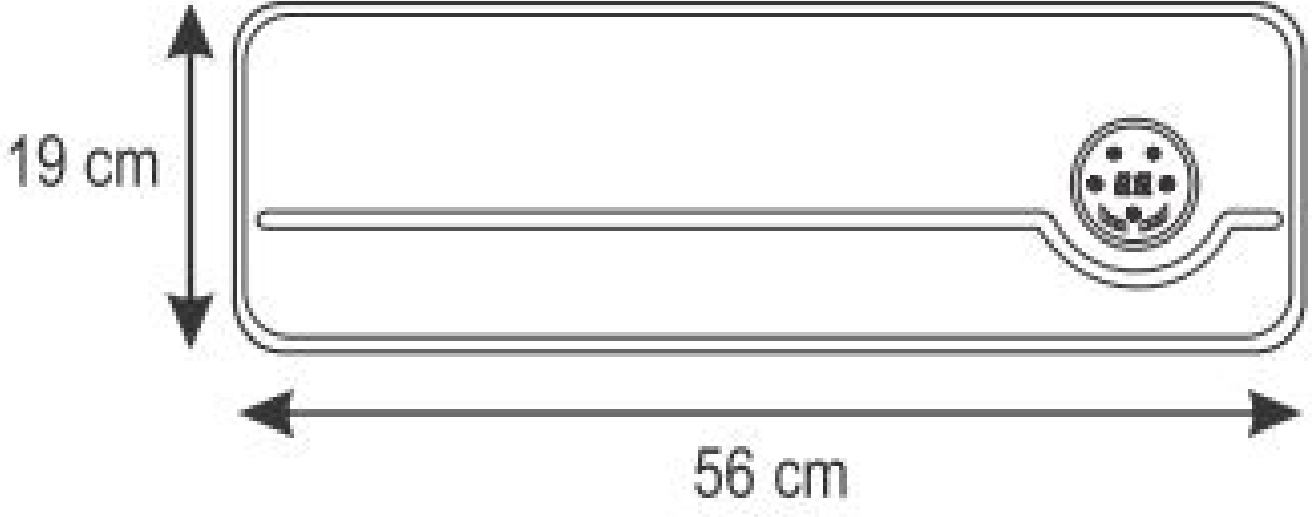
19 cm
56 cm

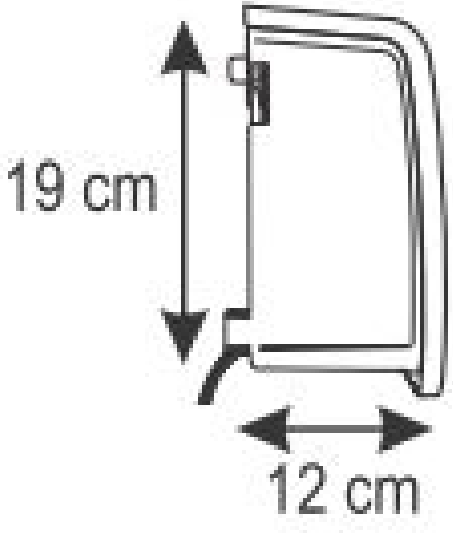
19 cm
12 cm