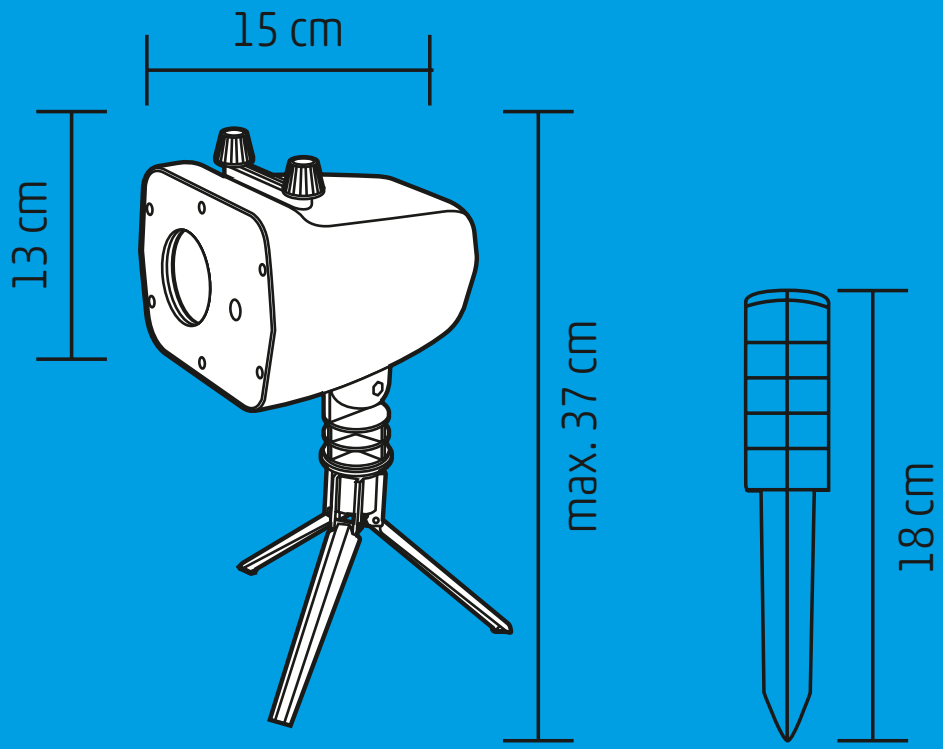
15 cm
13 cm
max. 37 cm
18 cm