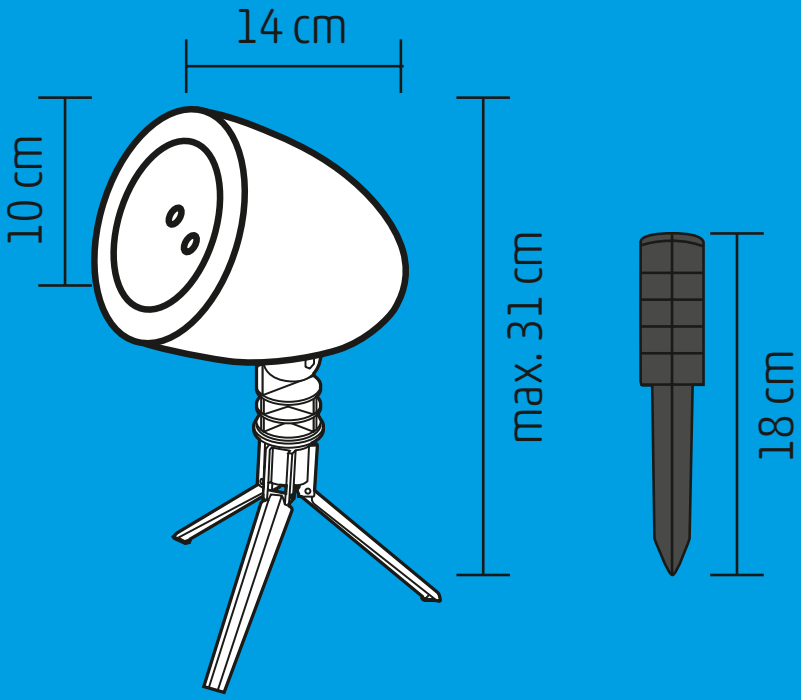
14 cm
10 cm
max. 31 cm
18 cm