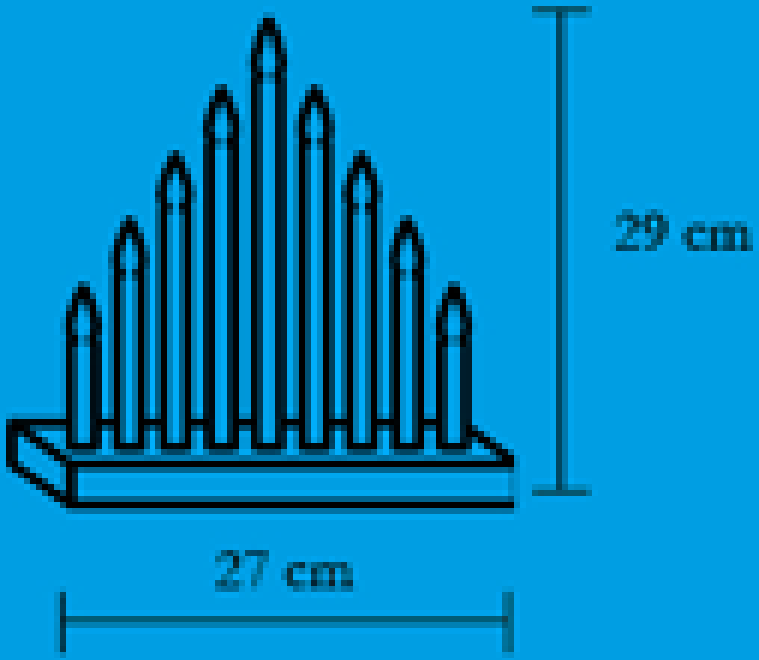
29 cm
27 cm